Your Expert Partner for **Human Machine Interfaces**

Illumination element

Distribution by Mouser

45-320.1H16

https://mouser.eao.com/component/45-320.1H16/...

Your product:

45-320.1H16
Illumination element

MOUNTING

Component mounting type:	Front mounting

OPERATING-/INDICATION PART

Illumination colour:	Green

ELECTRICAL CHARACTERISTICS

Operating voltage:	24 V AC/DC
Surge voltage resistance:	4 kV
Lumi. Intensity:	900 - 1400 mcd

MECHANICAL CHARACTERISTICS

Terminal:	Screw terminal
Terminal details 1:	Solid 2 x (1.0 … 1.5mm^2) – With end sleeves 2 x (0.5 … 0.75 mm^2)
Terminal details 2:	Finely stranded – Without end sleeves 2 x (0.5 … 0.75 mm^2) – Without end sleeves 2 x (0.5 … 1.5 mm^2) – For AWG cables for auxiliary contacts 2 x (18 … 14)
Weight:	0.01 kg

CERTIFICATE

REACH:	REACH compliant
RoHS:	RoHS compliant

OTHER

Short Description: Illumination element, Screw terminal, Green, 24 V AC/DC, Front mounting

Wiring diagrams:

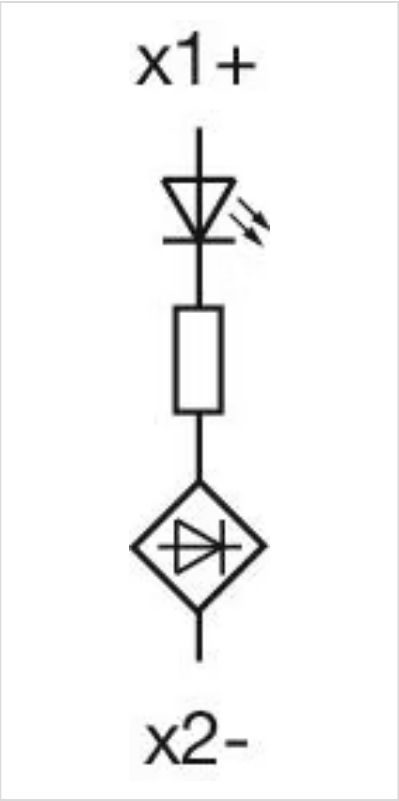
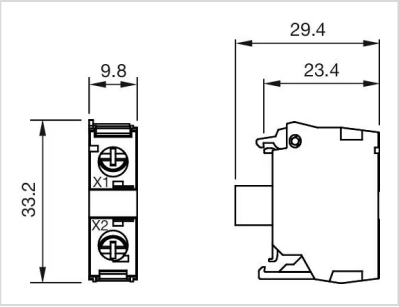
Dimension drawings: