Your Expert Partner for **Human Machine Interfaces**

Actuator

Distribution by
Mouser

704.000.4

https://mouser.eao.com/component/704.000.4/en...

Your product:

704.000.4
Actuator

FRONT

Front dimension:	Ø 29 mm
Front form:	Round

MOUNTING

Design:	Raised
Mounting type:	Panel mounting

OPERATING-/INDICATION PART

Lens cap colour:	Yellow
Lens cap material:	Plastic
Lens cap optical effect:	transparent
Marking cap colour:	White
Marking cap optics:	translucent

ELECTRICAL CHARACTERISTICS

Standards:	The switches comply with the “Standards for low-voltage switching devices” DIN EN 60947-1

MECHANICAL CHARACTERISTICS

Terminal:	Screw terminal
Weight:	0.032 kg

AMBIENT CONDITION

IP Protection:	IP65 front side
Operating temperature:	– 40 °C ... + 55 °C
Storage temperature:	– 40 °C ... + 85 °C

CERTIFICATE

REACH:	REACH compliant
RoHS:	RoHS compliant

OTHER

Short Description:	Actuator, Ø 29 mm, Round, Screw terminal
Housing colour:	Grey
Housing material:	Plastic

Wiring diagrams:

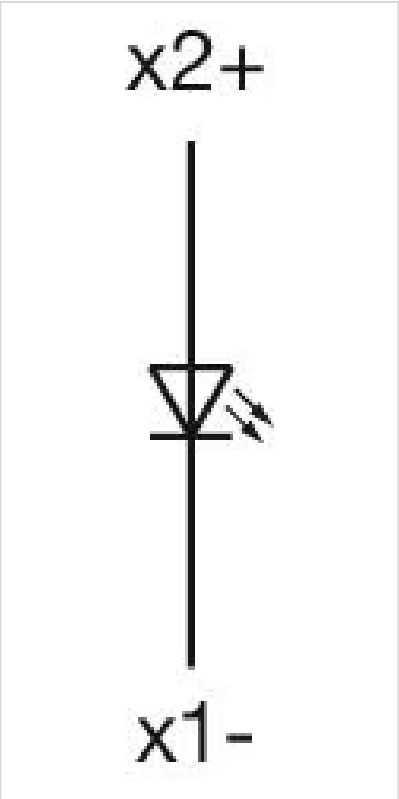

Mounting cut-outs:

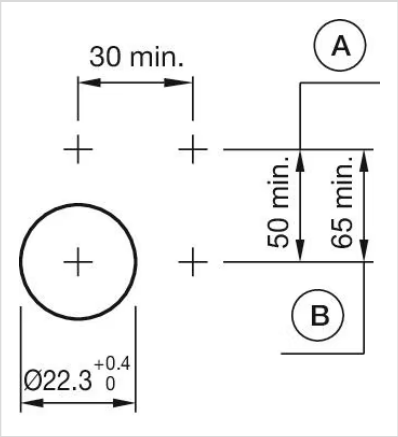

A = Screw terminal
B = Push-in terminal (PIT)

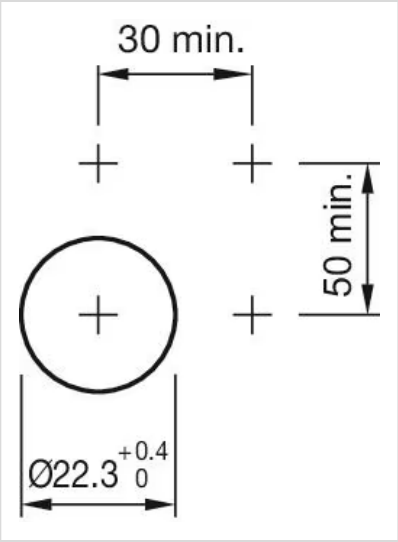

Dimension drawings:

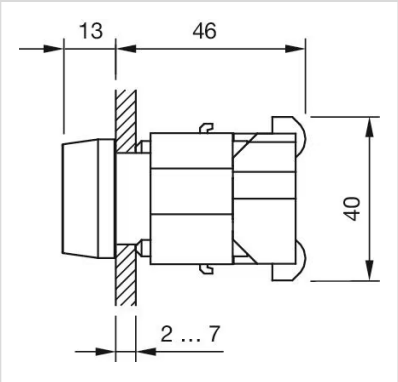

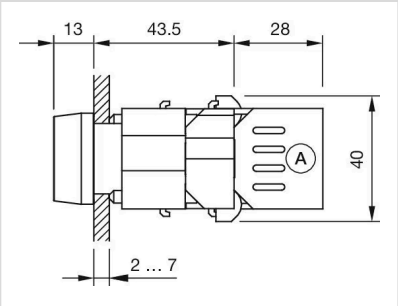

A = Screw terminal